Installation Guide

A step by step installation guide for installing Adek Enhanced Grip and Comfort Grip aluminium decking boards

- **A2fl-s1 / A2, s1-d0 Certification**
- **Rapid installation**
- **Friendly + safe underfoot**
- **100% recycled**

Components

The components delivered to you will be dependent upon the system that you have ordered. The list below simply shows all of the components within our aluminium decking system.

Adek Comfort Grip

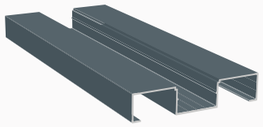

Comfort Grip 147:30

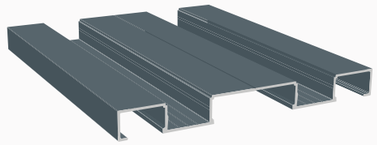

Comfort Grip 295:30

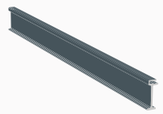

Support Legs 30

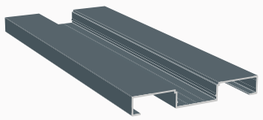

Comfort Grip 147:20

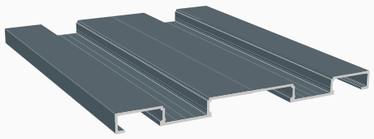

Comfort Grip 295:20

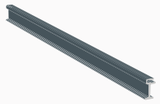

Support Legs 20

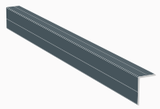

Universal End Trim
(Comfort Grip Only)

Adek Enhanced Grip

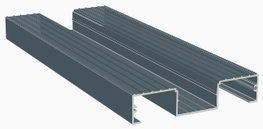

Enhanced Grip 147:30

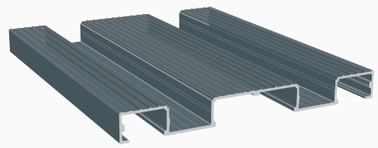

Enhanced Grip 295:30

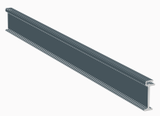

Support Legs 30

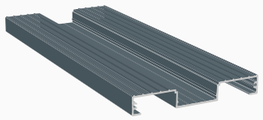

Enhanced Grip 147:20

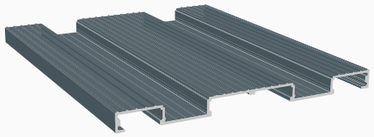

Enhanced Grip 295:20

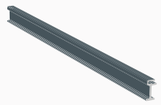

Support Legs 20

End Plate
(Enhanced Grip 147:30 only)

End Plate
(Enhanced Grip 295:30 only)

End Plate
(Enhanced Grip 147:20 only)

End Plate
(Enhanced Grip 295:20 only)

Adek Substructure

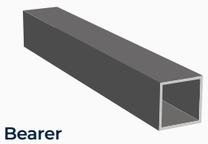

Bearer
50mm x 50mm x 3mm

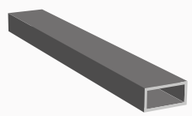

Bearer
25mm x 50mm x 3mm

Pedestal

Tools required

Corded/cordless drill

Measuring tape

Spacers

Circular or cross mitre saw for cutting, with suitable metal cutting blade

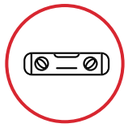

Spirit Level

TX25 Torx head bit for TORX Screws used for End plates and Edge Trims

Adek board installation drill bit – 3mm or 3.5mm

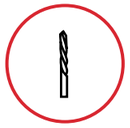

End Trim drill bit – 3mm (if End Trim used)

Hex socket bit to suit M5.5 head screws

Rubber Mallet

Anti-corrosion spray - if installing onto steel

Fixings

Fixings are supplied directly by Adek

- 5.5 x 25mm screw (for the boards to bearers)
- 5.5 x 38mm screw (for the boards to bearers)
- 4.8 x 19mm screw (end trim and end plate)

Site Storage

Ensure boards are kept on the pallets they arrive on until use. Pallets must be stored on a flat surface and kept away from construction work.

Adek Pre-Installation Guidance

Deck boards and channel covers will arrive on site 100mm over length and on occasion with a powder coat jig hole in this extra length. If you have not requested that these holes be removed (additional service offered at point of sale), they will either need trimming prior to fitting or used in areas that are hidden from view i.e. under End Trims.

Channel covers must not be staggered or bridge individual board ends where there is an end-to-end expansion joint.

Channel covers are supplied in lengths that match the specified deck board length.

Any deck boards cut to length on site will also require the associated channel covers cut to the same length.

This will ensure there are no mismatched lengths of channel covers, creating unrecommended joins in the middle of a deck board.

When cutting either 147mm or 295mm deck boards to length, on site using a chop saw, this must be capable of cutting in excess of 300mm for the greatest width. Recommended blades should be a TCT blade with a high number of teeth.

When cutting deck boards lengthways (ripping a board) we recommend a similar TCT blade.

Board load capacities

Comfort Grip 147

20mm depth:	Max. 600mm centres at 4kN point load
30mm depth	Max. 600mm centres at 4kN point load

Enhanced Grip 147

20mm depth:	Max. 600mm centres at 4kN point load
30mm depth:	Max. 600mm centres at 4kN point load

Max unsupported 147 board end overhang: 20mm & 30mm depth = 50mm

Comfort Grip 295

20mm depth:	Max. 600mm centres at 4kN point load
30mm depth:	Max. 1200mm centres at 2kN point load

Enhanced Grip 295

20mm depth:	Max. 600mm centres at 4kN point load
30mm depth:	Max. 1200mm centres at 2kN point load

Max unsupported 295 board end overhang: 20mm depth = 100mm / 30mm depth = 150mm

These fixing centres are in accordance with BS 8579:2020 Guide to the design of balconies and terraces and produce a defelection of less than 5mm as recommended.

Cutting/ripping a board along its length

1 Wear all appropriate PPE for cutting metal i.e. gloves, goggles, ear defenders etc.

2 Ensure board is marked clearly along its length. Measure twice – Cut once!

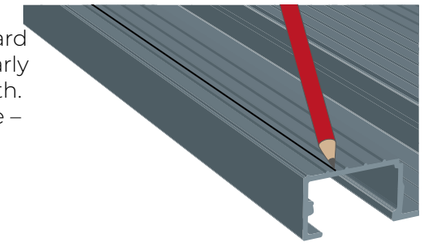

3 Clamp board to a secure, level surface making sure there is sufficient clearance underneath the board for the blade to move freely along the entire length.

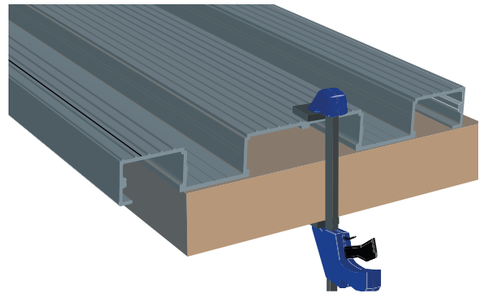

4 Carefully cut the board along the marked line.

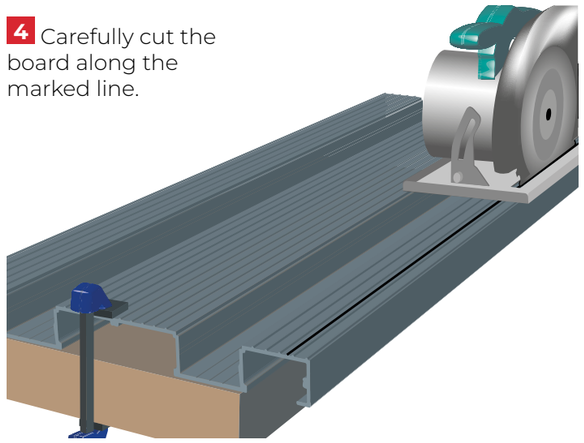

5 Deburr along the cut edges.

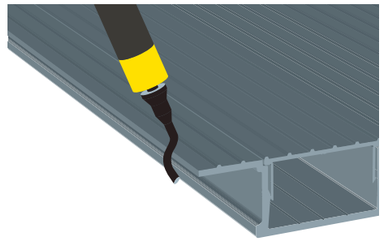

6 Install a Leg Support Trim by tapping it on along the cut edge using a rubber mallet. The Leg Support is to assist with strength where material has been removed.

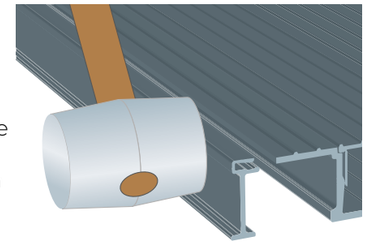

7 For any cut edges or ends that are left exposed, colour coded Touch Up pens are available.

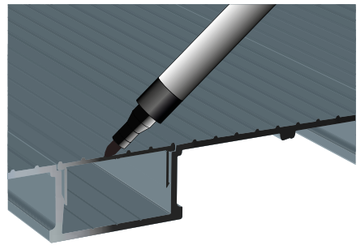

Installing Adek on to existing steelwork

1 Predetermine the layout (rotation, staggered etc.) of your decking and where your cuts (if any) are going to be.

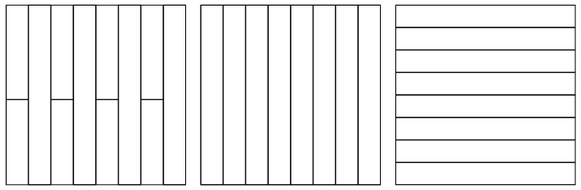

2 Decide which side of the installation you require a full board to start/end or where a cut/ripped down board will be located. Place ripped board where the least amount of footfall is expected and ensure an appropriate Leg Support Trim is applied.

The maximum unsupported board end overhang is 150mm for the 30 x 295mm board. For other board details please contact our technical department.

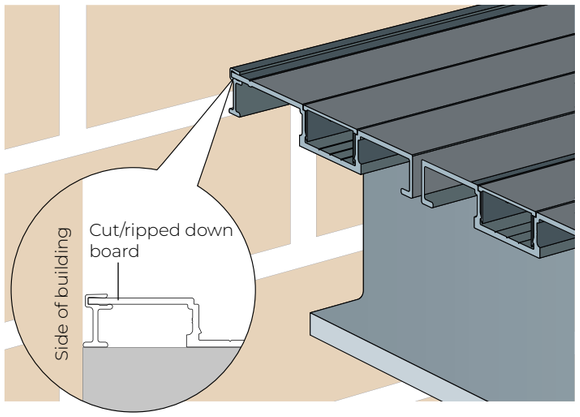

3 Ensure surfaces where decking is to be installed are all clean and even. Any uneven surfaces can result in distortion of the board which may allow some movement in the channel covers. When fixed down to a secure flat surface, the boards are designed to ‘grip’ the channel covers securely.

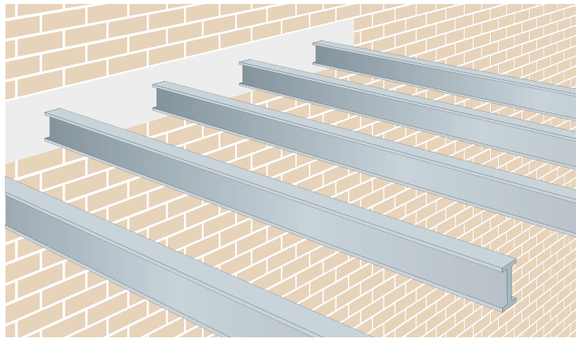

4 Place the first board down (minus the channel cover/s) and predrill through the board and into/through the substructure. It may be necessary due to the thickness of the steel for a larger drill bit to be used. Please refer to the Technical Screw Information for clarification (P.3). Our screws do have a cutting tip but we recommend pre-drilling of the boards and substructure so that any swarf can be cleared away to avoid any corrosion risks of bare metals reacting in the future which can cause leaching and staining.

5 Apply an anti-corrosive spray to the pre-drilled holes to avoid any possible galvanic reaction with the steel substructure.

Pre drill holes using 3/3.5mm steel drill bit.

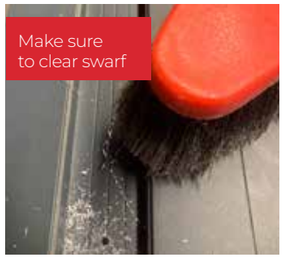
Make sure to clear swarf

Apply anti-corrosion spray to drill holes

6 Ensure board is in its correct position and install the screws. One screw is recommended per fixing point per board channel and screws should be a minimum of 20mm from the end of board.

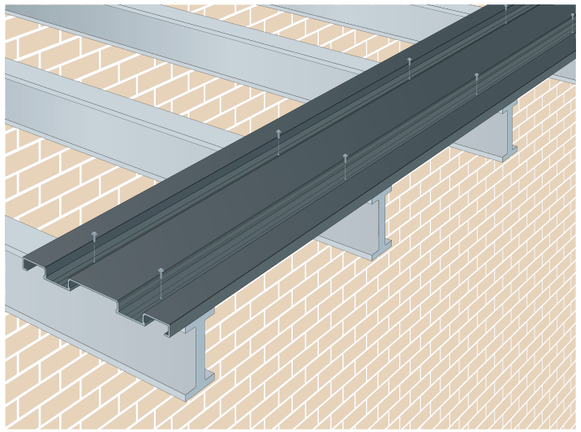

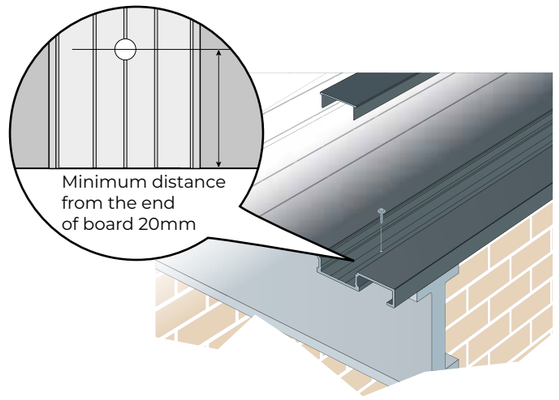

Installing Adek on to existing steelwork

7 Clip the channel cover into position. This should be done using a rubber mallet to knock the covers down into place.

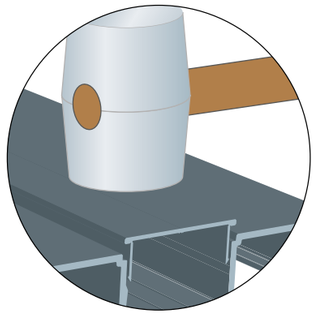

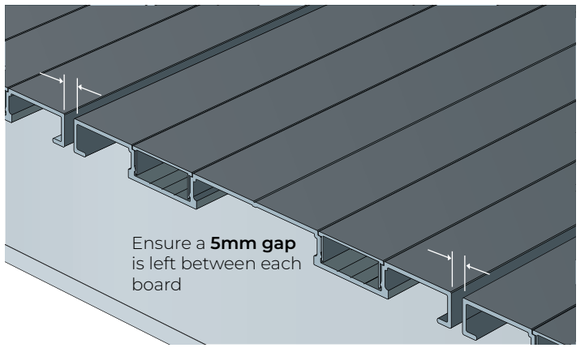

8 To meet ventilation, drainage and expansion requirements ensure a **5mm gap** is left between each board.

9 Place next board down parallel to the previous 'starter' board and ensure there's a **5mm gap** in between.

10 **If using Adek Comfort Grip:** To complete the deck, fit the Universal End Trim to the ends of the boards. The trim should be cut to size and fixed down using the End Trim screws. One screw is required per board end and should be fixed into the centre of each board. Predrill using a 3mm drill bit to clear the swarf from the surface. A touch up pen can be used to paint the cut ends of the trim where visible.

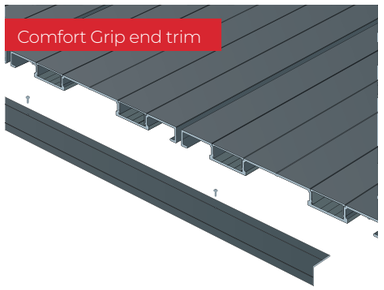

If using Adek Enhanced Grip: To complete the deck, fit the End Plates to the ends of the boards. The End plates should be fixed into the screw ports using appropriate End Trim/Plate screws, using all ports available.

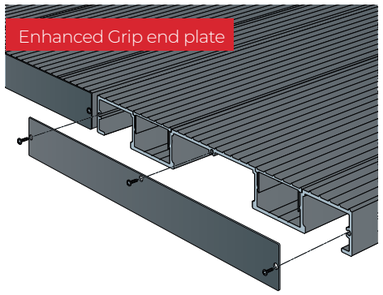

Installing Adek on to our aluminium bearers on pedestals

1 Predetermine the layout (rotation, staggered etc.) of your decking and where your cuts (if any) are going to be.

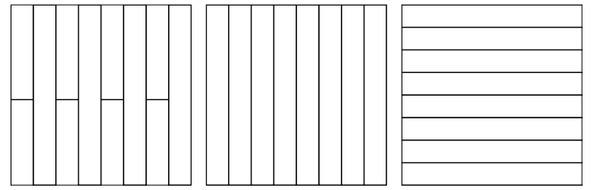

2 Decide which side of the installation you require a full board to start/end or where a cut/ripped down board will be located. Place ripped board where the least amount of footfall is expected and ensure an appropriate Leg Support Trim is applied.

The maximum unsupported board end overhang is 150mm for the 30 x 295mm board. For other board details please contact our technical department.

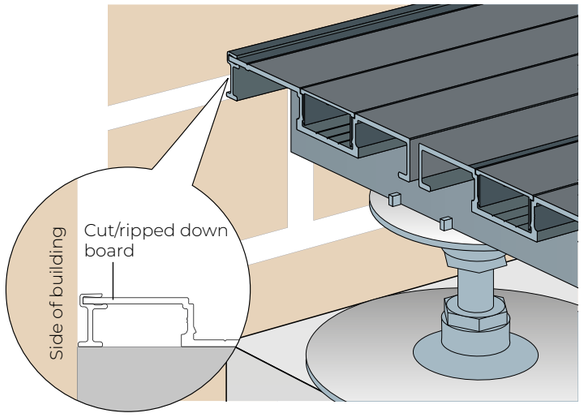

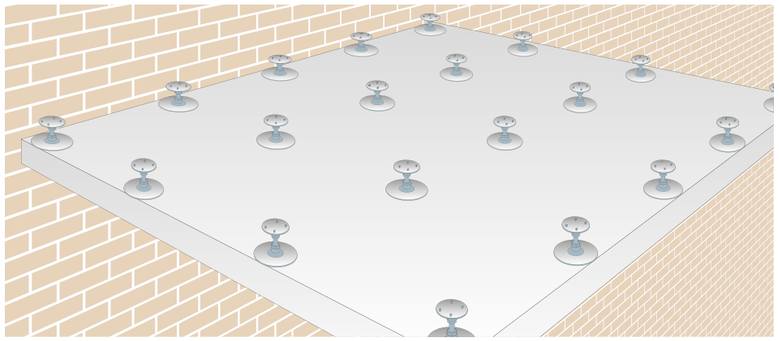

3 Sketch/Plan locations of pedestals within area to be decked and lay them out on the ground according to your plan.

When using adjustable pedestals these can be set to create suitable falls.

Installing Adek on to our aluminium bearers on pedestals

4 Where there is no risk of wind uplift a ‘floating system’ of the bearers, loosely sitting on top of the pedestals is acceptable as in most instances the weight of the decking on top of the bearers is sufficient to hold it all in place.

If the area may be at a level subject to high winds, for example, on a roof terrace of a high-rise building, then we would suggest securing the bearers to the pedestals.

This will depend on the type of pedestal and bearer system used. Please contact our technical team if more information is required.

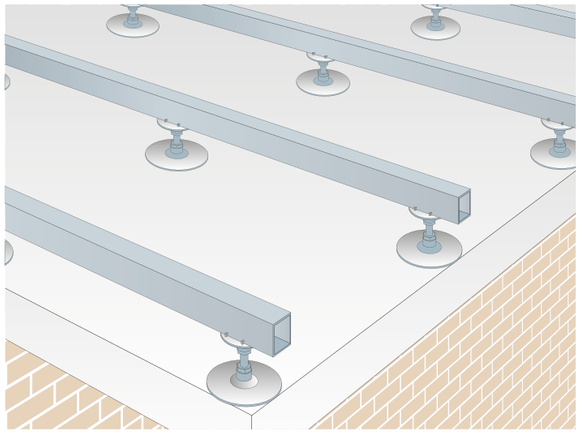

5 Place the first board down (minus the channel cover/s) and predrill through the board and into/through the substructure. Our screws do have a cutting tip but we recommend pre-drilling of the boards and substructure so that any swarf can be cleared away.

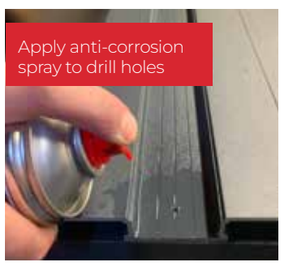

Installing Adek on to our aluminium bearers on pedestals

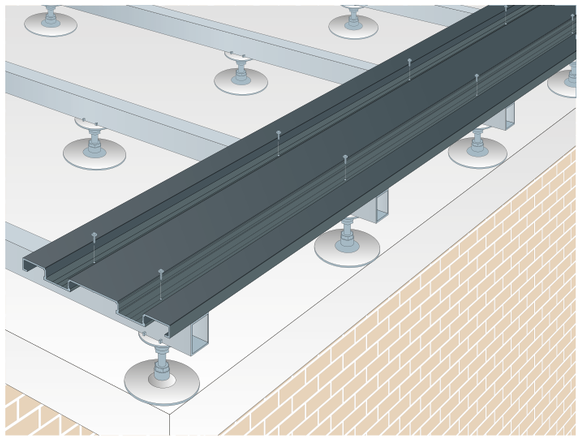

6 Ensure board is in its correct position and install the screws. One screw is recommended per fixing point per board channel and screws should be a minimum of 20mm from the end of board.

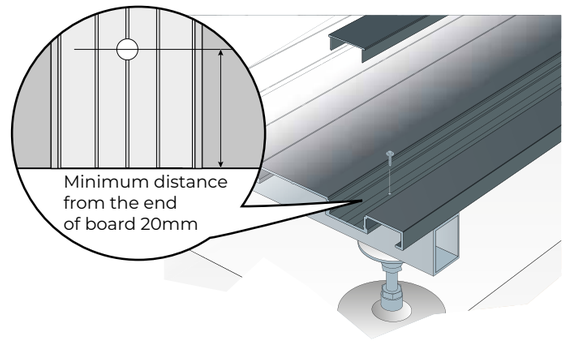

7 Clip the channel cover into position. This should be done using a rubber mallet to knock the covers down into place.

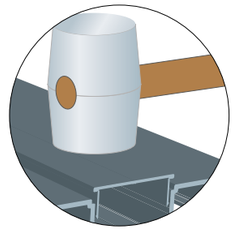

8 To meet ventilation, drainage and expansion requirements ensure a **5mm gap** is left between each board.

9 Place next board down parallel to the previous ‘starter’ board and ensure there’s a **5mm gap** in between.

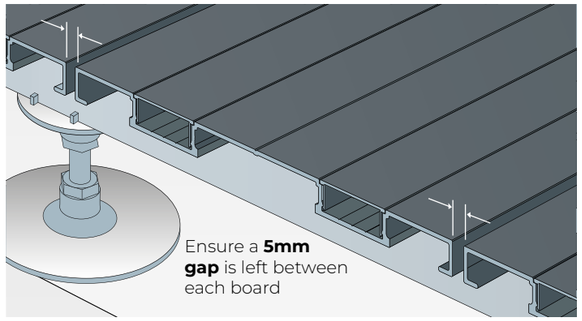

Installing Adek on to our aluminium bearers on pedestals

10 **If using Adek Comfort Grip:** To complete the deck, fit the Universal End Trim to the ends of the boards. The trim should be cut to size and fixed down using the End Trim screws. One screw is required per board end and should be fixed into the centre of each board. Predrill using a 3mm drill bit to clear the swarf from the surface. A touch up pen can be used to paint the cut ends of the trim where visible.

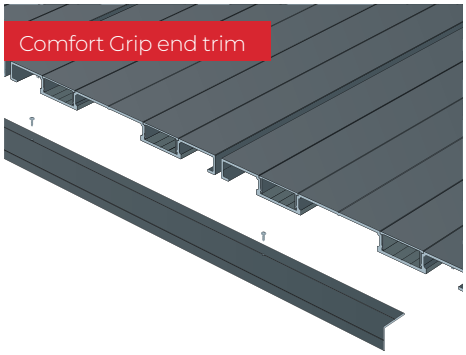

If using Adek Enhanced Grip: To complete the deck, fit the End Plates to the ends of the Adek Enhanced Grip boards. The End plates should be fixed into the screw ports using appropriate End Trim/Plate screws, using all ports available.

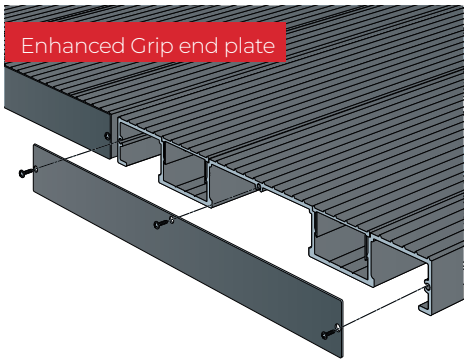

To keep your Adek decking system in top condition, we recommend you reading our Care & Maintenance guide, which can be found at a-dek.co.uk.

If you have any questions in regards to the installation of our Adek decking system, please do not hesitate to get in touch with a member of our technical team or check out our installation video by scanning the QR code.

ecodek®
Unit 13 Abenbury Way
Wrexham Industrial Estate
Wrexham
LL1 3 9UZ

Tel: 0 1978 667 840
Fax: 0 1978 667 857
Email: enquiries@ecodek.co.uk

a-dek.co.uk